At the time of issue this report has not been published. Any author desiring to quote this paper should refer to it as "A paper of the Meteorological Research Committee (London), M.R.P. No. 867 by Mr. G. E. W. Hartley A copy is available in the Library of the Meteorological Office."

M.R.P. 867
S.C.I/88
9th June, 1954

AIR MINISTRY

METEOROLOGICAL RESEARCH COMMITTEE

A Remote Recording Electrical Anemograph

by
G.E.W. Hartley (Meteorological Office)

Summary:

This report deals with trials of the Cup Generator Anemometer Mk. Ib with a quick response recording voltmeter to record wind speed and a Magslip transmitting wind vane with a single pen direction recorder developed in M.O.16 to record wind direction. The instruments are described, with notes on their performance, reliability and cost: specimen charts are shown.

1. Wind speed

A recorder to work with the standard M.O. Generator Anemometer Mk. Ib has been described by the writer in Proceedings of the Institution of Electrical Engineers, Vol. 98, Part II, No. 64, August 1951, (2.5.) pp. 434-435. It was subsequently found that if the speed scale on the chart was that derived from wind tunnel tests, isolated gusts were recorded as much as 15% low, because the speed of response of the recorder was not high enough to enable it to follow the generator, although a persisting wind was correctly recorded.

The recorder was therefore modified by changes in the transformer and rectifier, which necessitated their being housed in a separate case instead of inside the recorder, and by altering the coil winding of the recorder so that it took a considerably larger current from the generator, the extra power so obtained enabling stronger hair springs to be used in the recorder. With these modifications the recorder will now follow the generator and gusts are correctly recorded, as well as steady speeds. One small effect of taking a larger current from the generator is to be noted: if an indicating dial is connected in parallel with the recorder, its readings will be about 3% low. In any case the correct indicated speed is shown on the chart, and by the recording pen acting as a pointer against the range strip of the recorder.

Comparisons between this recorder and a Dines Remote Recording P.T.A. were made at S. Farnborough for some months, the generator anemometer being supported on a side bracket from the top of the tower on which the P.T.A. head is mounted. Charts from both were tabulated in M.O.16 and the tabulations showed that, taking daily averages of hourly menas, the two types of instrument agreed to within $\frac{1}{2}$ knot; for daily averages of maximum gusts the generator anemometer showed 1-2 knots higher, probably due to the quicker response of the cup generator anemometer at speeds of 30 knots and over.

/Two

Two more recorders of the same type were obtained; wind tunnel tests showed that their scale values were in close agreement with those of the original recorder, so that the same charts could be used for all three with confidence. These two recorders have been connected to two generator anemometers mounted on the 40 ft. tower on the roof at Harrow and have been in operation for some months; their charts show close agreement, though there are sometimes differences due to interference between the two anemometers and other instruments on the tower. The recorder is shown in Fig. 1 and its dimensions in Fig. 2.

Accuracy and consistency of performance are rather difficult to assess; but in the case of the original recorder calibration was carried out in the wind tunnel before and after the S. Farnborough tests, and no change of calibration occurred; and during the wind tunnel tests, the tunnel speed was brought to a given value from several other speeds both higher and lower and the speed was correctly recorded with an error not exceeding $\pm \frac{1}{2}$ knot.

The inking system supplied by the makers of the recorder has proved very satisfactory; it consists of a fine tube suitably shaped, one end of which dips in an inkwell situated at the axis of the pen movement, the other end carrying the writing nozzle and resting lightly on the chart. The spindle of the electrical movement carries a stirrup with V slots; the inking tube is pivoted on knife-edge supports which rest in these slots. The inkwell end of the tube moves only in the ink, not through it; the hole in the top of the inkwell through which the tube enters is only just larger than the tube so that very little dust can get in and clogging of the tube does not occur. The weight of ink in the tube is constant, and the whole pen is balanced so that it will write with very small friction. Ink feed is by capillary, not syphon, action.

The chart is of 4 inches writing width, and has a speed of 3 inches per hour which can be altered to 1, 6 or 12 inches by changing the driving gears. It is 65 feet long, which gives a run of about 10 days with 3 inches per hour time scale. A range of 0-90 knots has been used but it would be easily possible to provide a smaller range and larger scale for normal use, with an extra series resistance which can be switched in to increase the range e.g. to 0-180 knots and reduce the scale.

As will be seen from the blank chart (Fig. 3) the graduations are nearly linear above 10 knots, and closer between 5 and 10 knots. Below 5 knots the readings are not distinguishable; the anemometer cups start to revolve at between 3 and 5 knots. In the specimen records (Figs. 4 and 5) the charts used are not correct, and the scale of the blank chart applies to them too. Charts with scales of 1 inch and 3 inches per hour are shown.

No trouble has been experienced with these recorders during M.O.16 trials; the only attention given is to top up the inkwell once a week and fit new charts when needed. The chart mechanisms used are synchronous motor driven but the makers can supply spring-driven mechanisms at a slightly higher cost.

In the case of six recorders used for the Severn Bridge wind measurements over several years, there were three cases of chart motor failure, and two cases where the calibration of the recorder changed; this was found to be due to faulty rectifiers, and when these were changed to another type as now used, no further trouble occurred.

The costs of the various parts are:-

		£. s. d.
Cup Generator Anemometer		18. 10. 0.
Indicating dial (if needed)		9. 0. 0.
Wind speed recorder	about	60. 0. 0.
Charts per dozen		2. 10. 0.

/2.

2. Wind Direction

For remote transmission of wind direction from the vane to the recorder, 2 inch Magslip motors type E2 are used. These operate from 50V. A.C. obtained from mains by a transformer, and form a synchronous link.

At present there is no standard M.O. wind vane embodying 2 inch Magslips, but they are commercially obtainable incorporating a mounting for the generator anemometer above the wind vane and Magslip, so that only one support is needed for both instruments.

Two vanes of this type made in M.O.16 were used in these tests.

The wind direction recorder is of the single pen type developed in M.O.16. In its original form it was shown at the Physical Society's Exhibition in April 1951 and was briefly described in the Met. Magazine, No. 949, Vol. 80, July 1951, page 202 and two illustrations.

In its present form it is shown diagrammatically in Fig. 6. The receiving Magslip (1) is geared down 1:8 to a gear wheel (2) which carries eight evenly spaced pins (3). One of these pins engages with a slot in a specially shaped block (4) pivoted to a moving arm (5) which also carries the recording pen (6). The axes of the gear wheel and moving arm are not coincident, and are so placed that when the gear wheel moves 45° from a central position, the slotted block disengages from the pin and is returned by a centering device (7) to the adjacent pin near to the central position. In the original design, the centering device was a torsion spring; this proved inconsistent in its performance, and was replaced by two pivoted and weighted levers (7) which are set so as to bring the part of the pen arm (8) on which they press, to a central position. This system has proved very reliable.

The movement of the arm from the central to the disengaged position corresponds to 360° of vane movement, and also to the movement of the pen from the centre of the chart to one or other edge.

The chart is marked with 720° of direction; when the pen gets to either edge of the chart, the pin disengages from the slot, and the centering device returns the pen through 360° (chart marking) to near the centre of the chart, and the slotted block engages with the pin nearest to the central position. The recorder is shown in Fig. 7.

There is a slight risk that when the arm is moving back to the centre the block may jump over, or stop short of, the central pin without engaging with it, thereby giving an incorrect record. In practice over several months trial re-centering has taken place many times and the block has only twice failed to engage. Specimen charts showing the appearance of the trace when re-centering occurs are shown in Figs. 8 and 9.

The centering device is adjustable but once set requires no further adjustment.

The chart mechanism and inking system are the same as those used in the wind speed recorder.

There are two theoretical objections to the geometry of the system. One is that as the pins on the gear wheel have a finite thickness, if recording takes place when the pin is on the point of emerging from the slot, the movements of the block and therefore of the pen do not exactly agree with those of the pin. In practice if this occurs, the block is always either released, or goes back fully on to the pin, and no wrong readings persist.

The other is shown in Fig.11. When the pin B moves about the axis O, the link BC (i.e. the arm) moves about the axis C.

/For

For correct recording, for equal angular movements AOD, DOE, EOF, FOB of the link OB, the angles BCE, ECE, ECD, DCA should also be equal to each other.

By calculation, when angles AOD etc. are $11^{\circ}15'$ each, BCF = $5^{\circ}54.5'$, FCE = $5^{\circ}53.5'$, ECD = $5^{\circ}53'$, DCA = $5^{\circ}52'$. The differences between these are so small that they do not show on the chart at all and may be neglected.

A later modification has been to reduce the size of the mechanism to allow it to go inside the same kind of case as the wind speed recorder. This recorder works perfectly satisfactorily, and is shown in Fig. 10.

Wind direction recorders of the type described have been used for some years in the Falkland Islands and at Cardington and have given satisfactory service. The latest design has been undergoing trials at Harrow and has given no trouble.

Costs:-

		£. s. d.	£. s. d.
Commercially obtainable Magslip wind vane, with anemometer mounting platform			42. 10. 0.
Recorder:	Case	8. 0. 0	
	Chart Mechanism	20. 0. 0.	56. 12. 0.
	E.2 Magslip	18. 12. 0.	
	Rest of Mechanism (Est)	10. 0. 0.	
Direction dial if needed			15. 0. 0.
Charts per dozen			2. 10. 0.

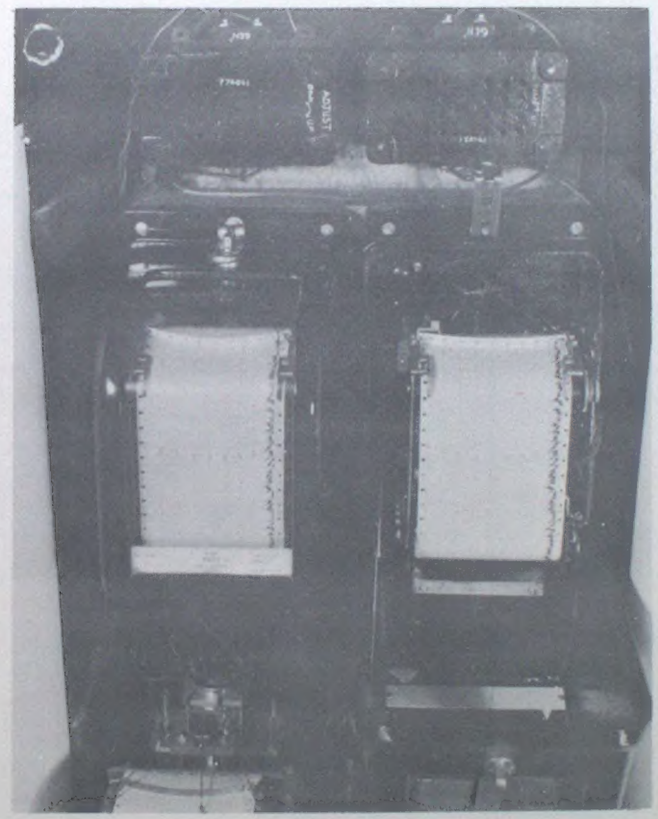

FIG. 1

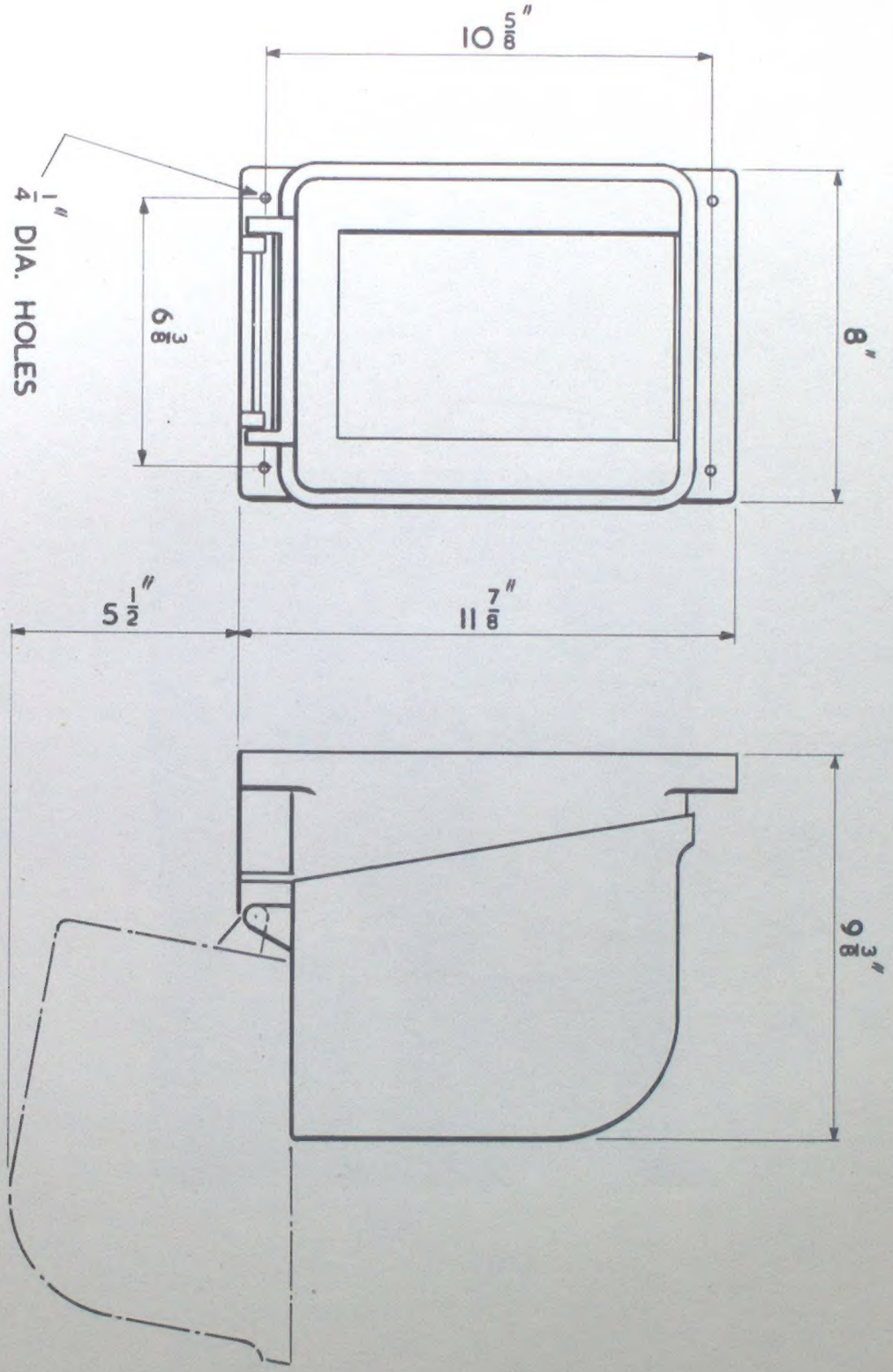

FIG. 2

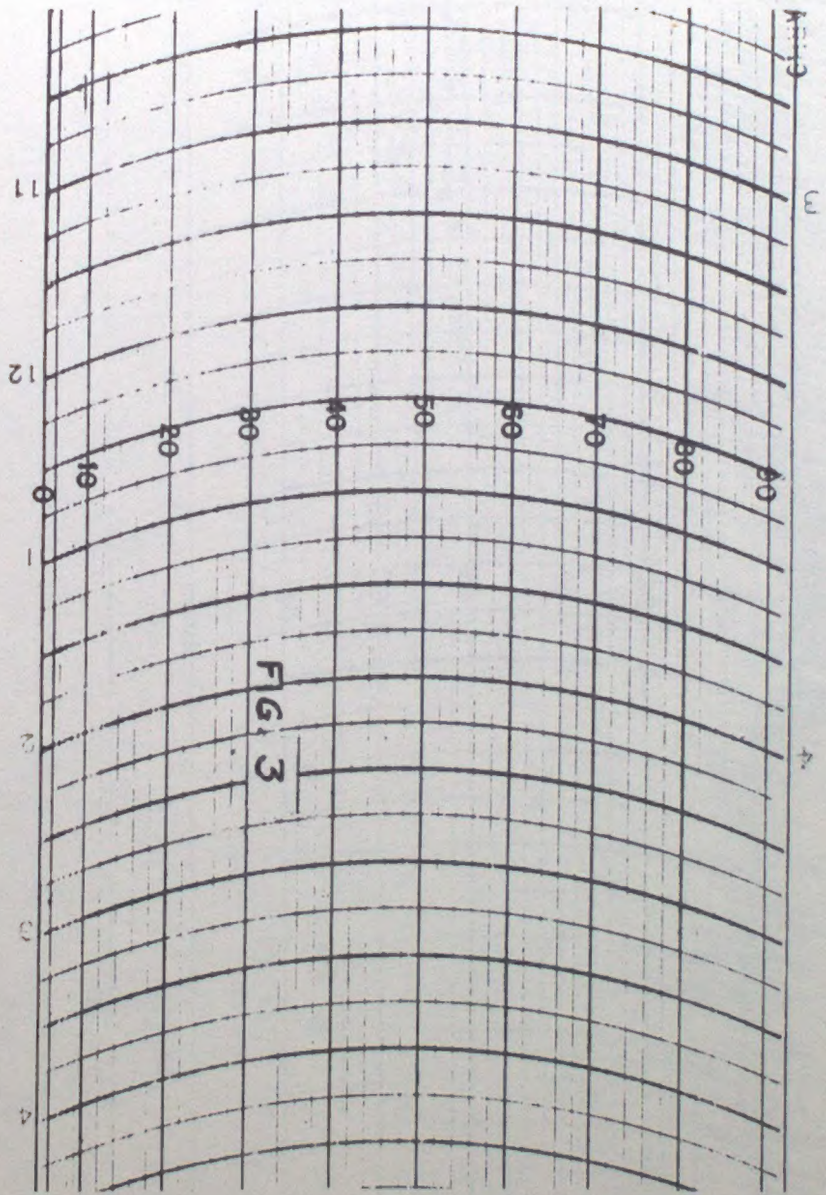

FIG. 3

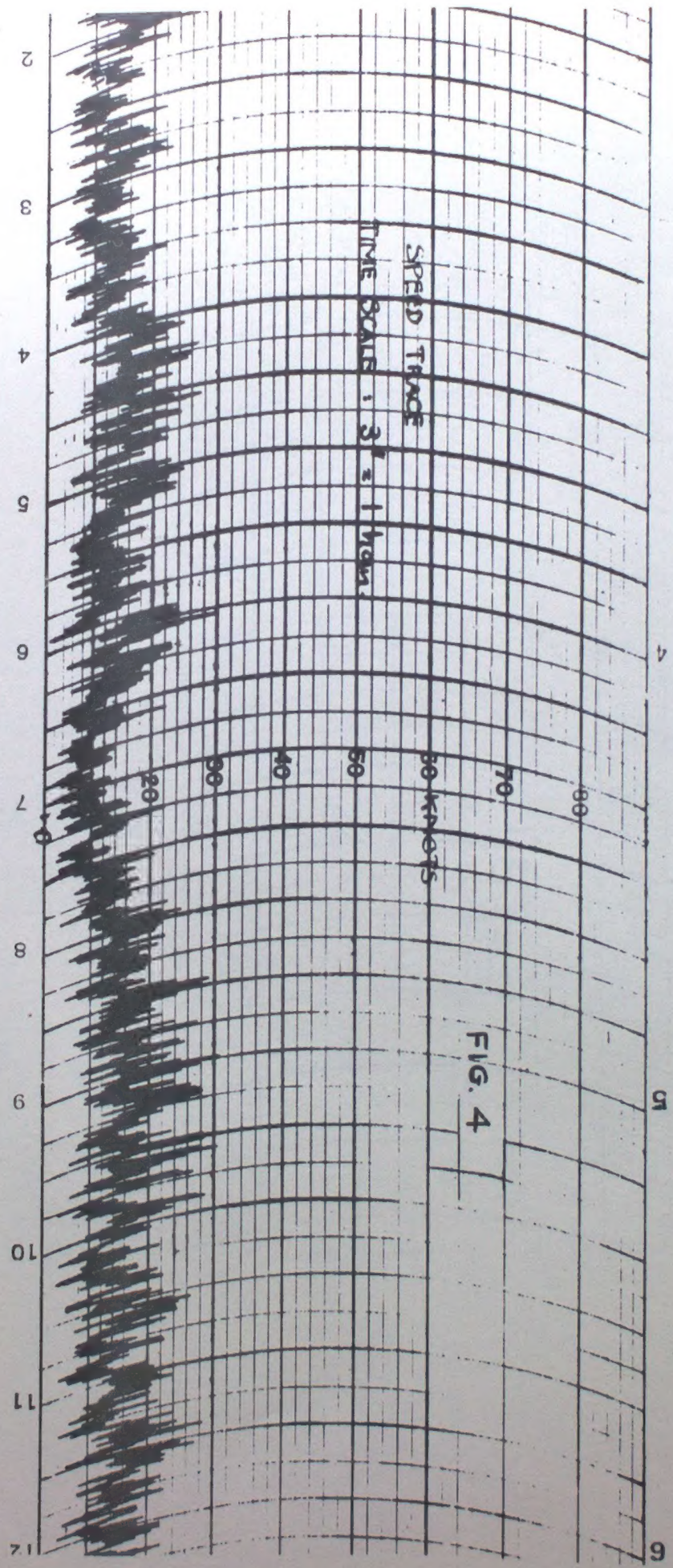
SPEED TRACE
TIME SCALE : 3" = 1 MINUTE
20
30
40
50
60 KNOTS
70
80
2
3
4
5
6
7
8
9
10
11
12
4
5
6

FIG. 4

M.R.P. 867

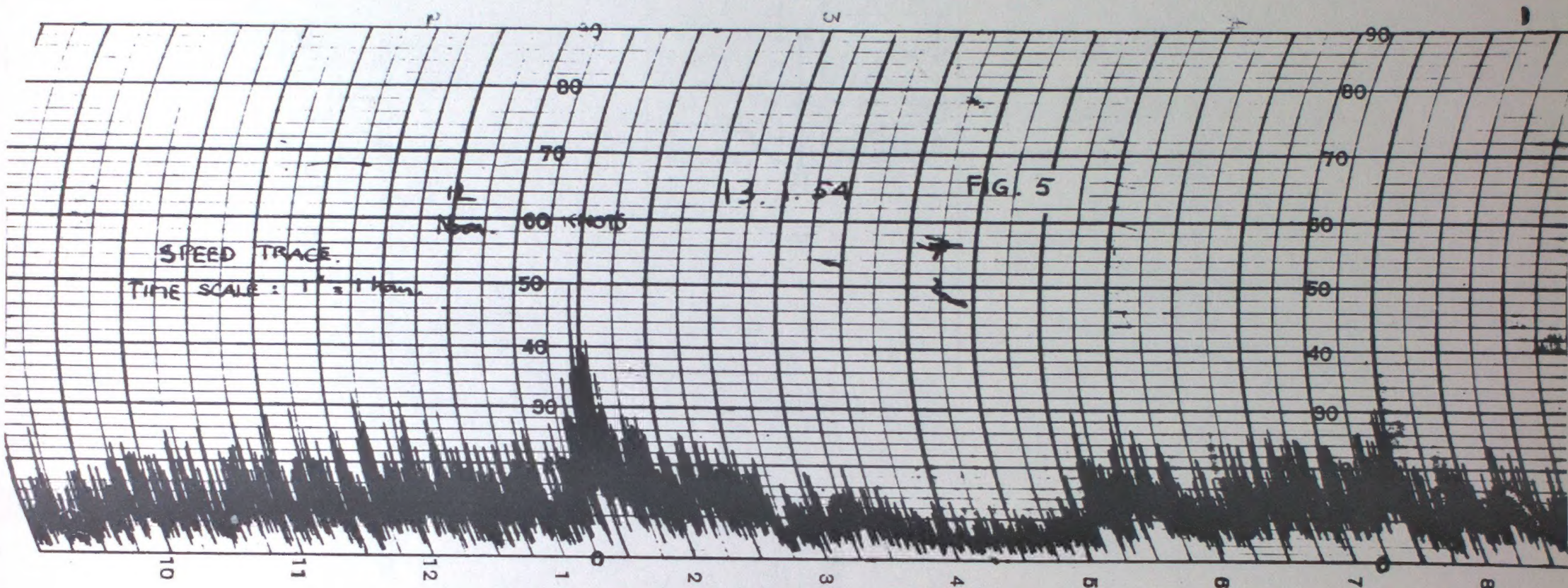
SPEED TRACE.
TIME SCALE : 1" = 1 hour.
13. 1. 54
12 Noon.
KNOTS
90
80
70
60
50
40
30
0
10
11
12
1
2
3
4
5
6
7
8

FIG. 5

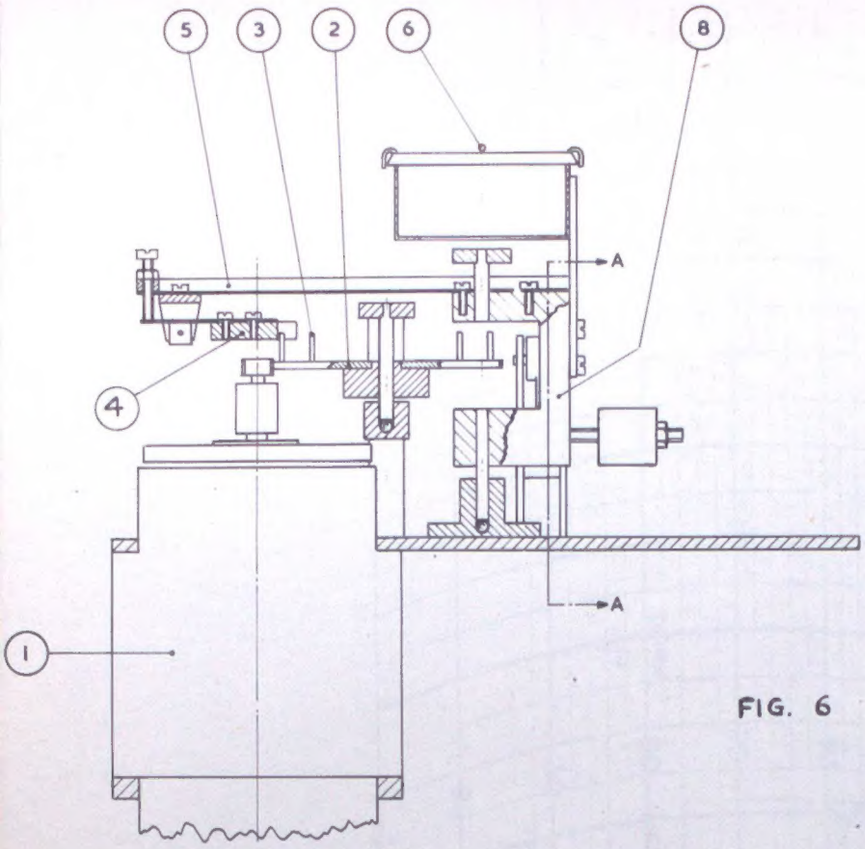

FIG. 6

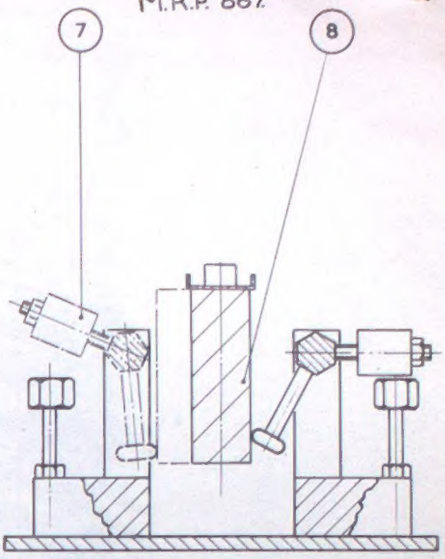

SECTION AT AA

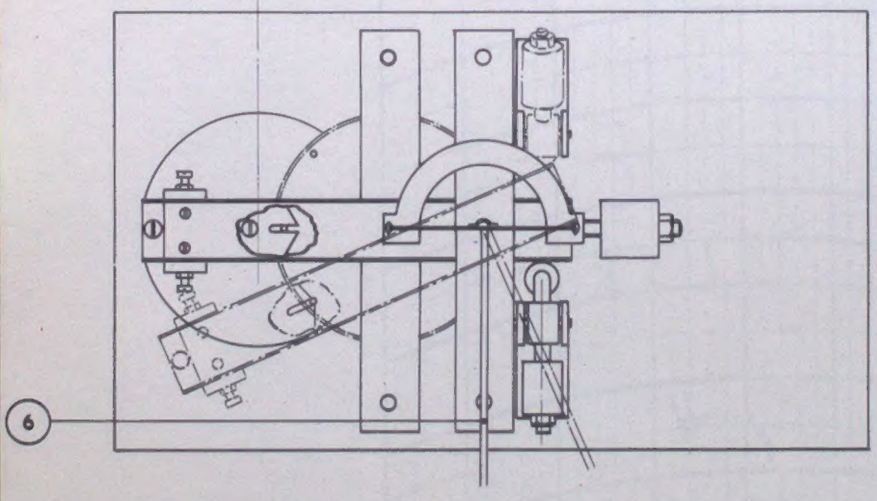

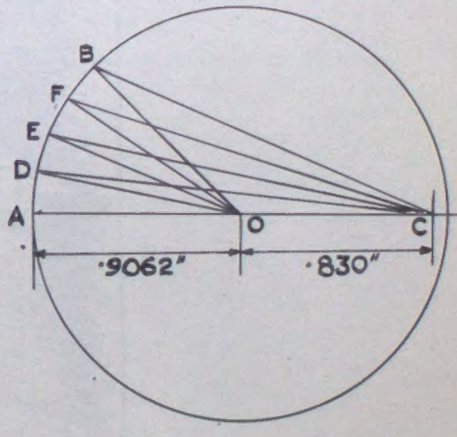

FIG. 11

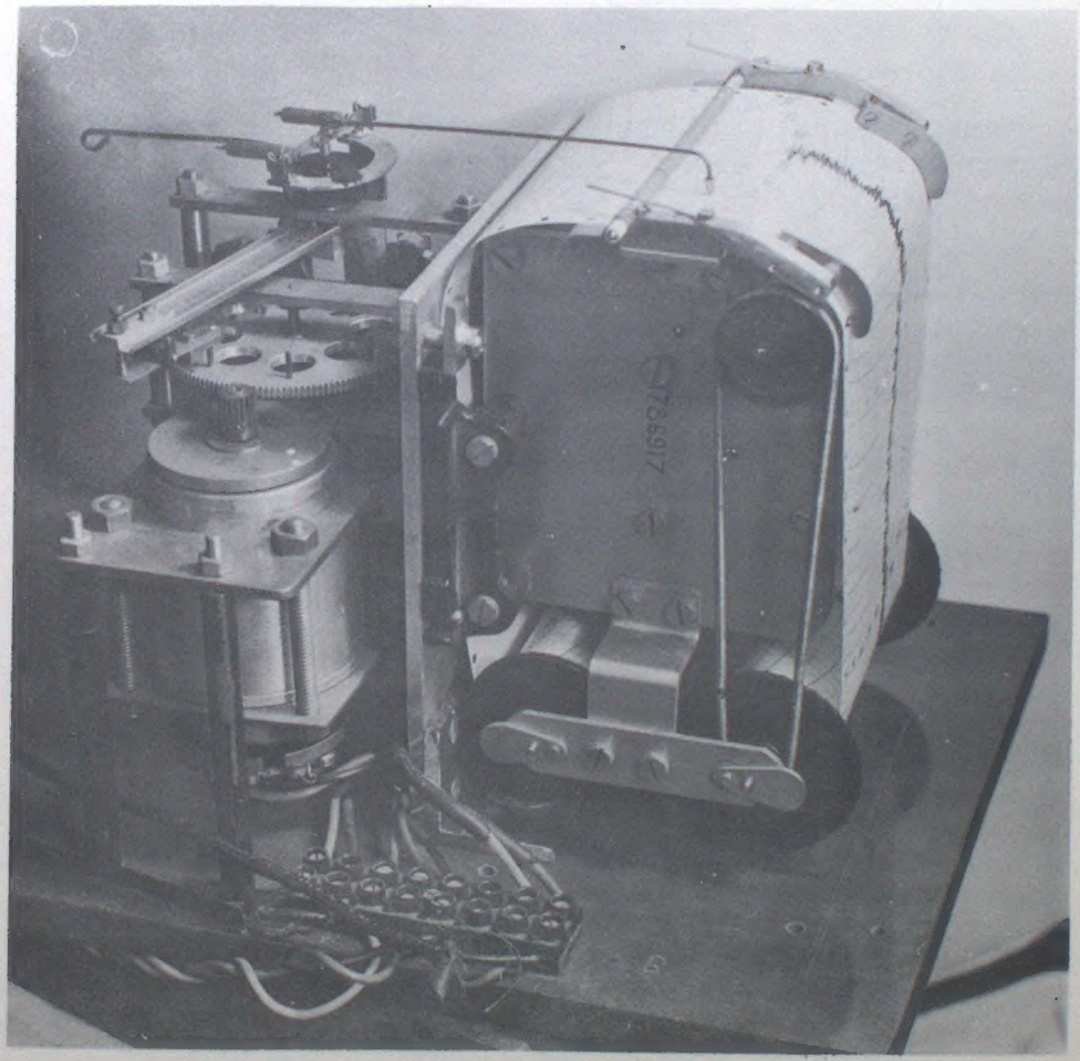

FIG. 7

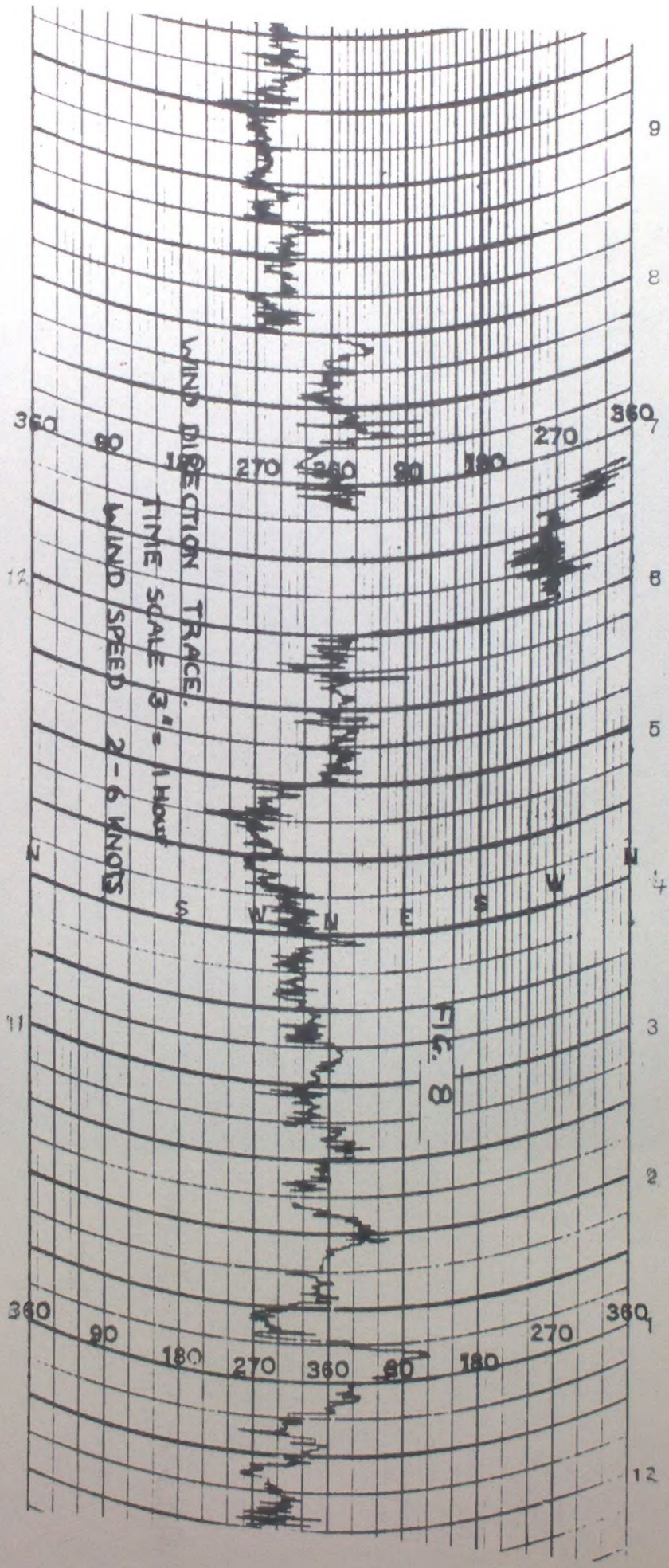
WIND DIRECTION TRACE.
TIME SCALE 3" = 1 HOUR
WIND SPEED 2-6 KNOTS
360
90
180
270
360
90
180
270
360
N
S
W
N
E
S
W
N
9
8
7
6
5
4
3
2
1
12

FIG. 8

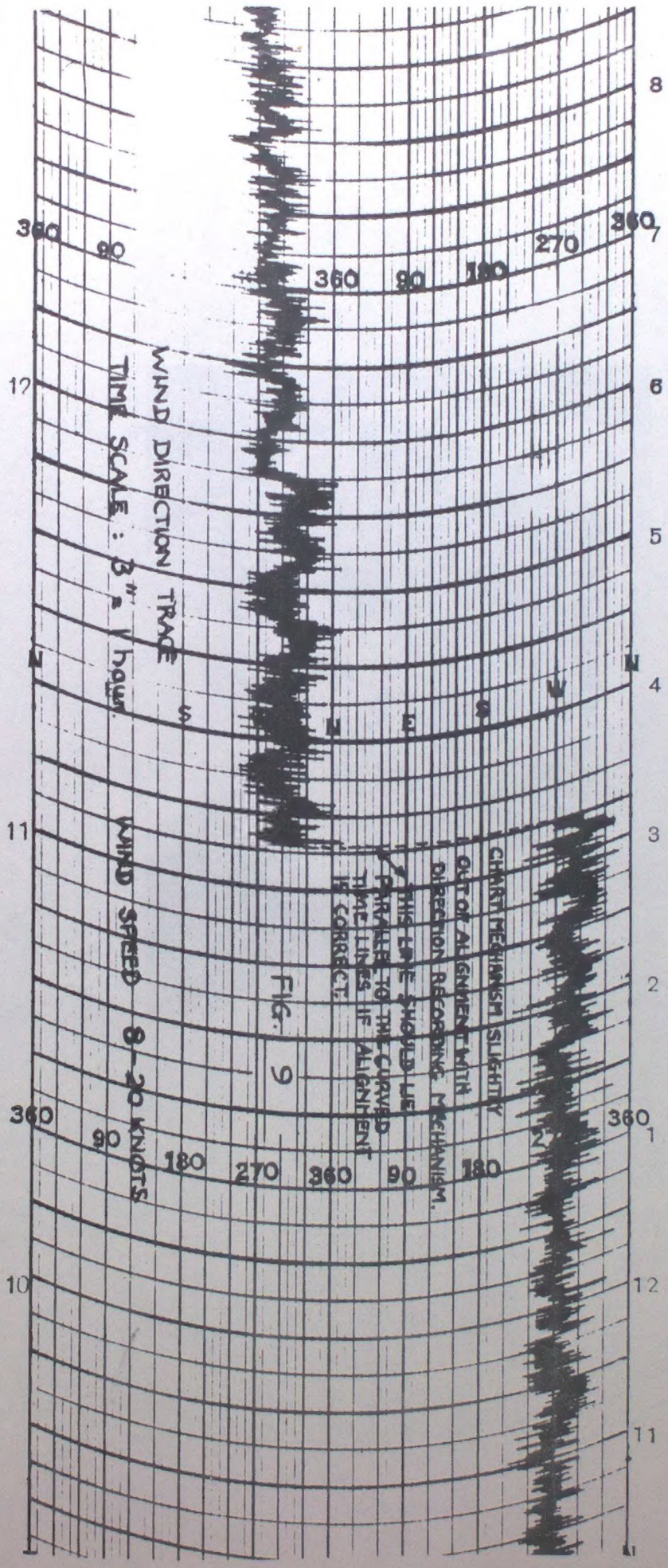
WIND DIRECTION TRACE
TIME SCALE : 3" = 1 hour
WIND SPEED 8–20 KNOTS
CHART MECHANISM SLIGHTLY OUT OF ALIGNMENT WITH DIRECTION RECORDING MECHANISM.
THIS LINE SHOULD LIE PARALLEL TO THE CURVED TIME LINES IF ALIGNMENT IS CORRECT.
360
90
180
270
N
E
S
W
12
1
2
3
4
5
6
7
8
9
10
11

Fig. 9

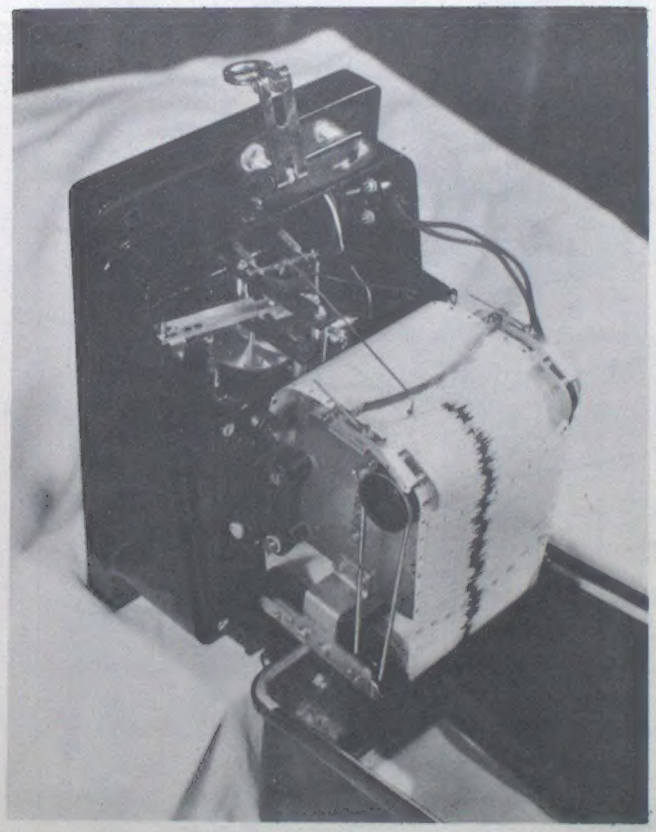

FIG. 10